Poles - All steel to be new ASTM A 36 Grade B or better.

Pole Paint- 1 Coat X- O Rust Primer, 2 coats X-O Rust , Oil- base Enamel Gloss Black.

Oval Eyebolts - 5/8" dia. Drop Forged galvanized eyebolt. 12,400 lb. rated tensile strength. Rural Utilities Service listed.

Through Bolts - 5/8" dia. galvanized bolt. 12,400 lb. rated tensile strength. Rural Utilities Service listed.

Cables - 3/8" EHS galvanized wire. 6 X 19 construction with a nominal strength of 13,000 lbs. Meets ASTM A 603.

Wire Rope Clip - 3/8" Galvanized cable clamp, meets Fed Spec. #FF-C-450 TY I CL2
Thimbles - All thimbles to be galvanized and meet FF-T-276B TY II.

Fence Rings - #9 gauge galvanized steel hog rings.

Netting - K 36 latex treated 3 strand Knotted netting 1 ¾" sq mesh. Mesh strength of 252 lbs (netting to be treated, not dyed or bonded)

Rope - 3/8" poly rope laced around perimeter.

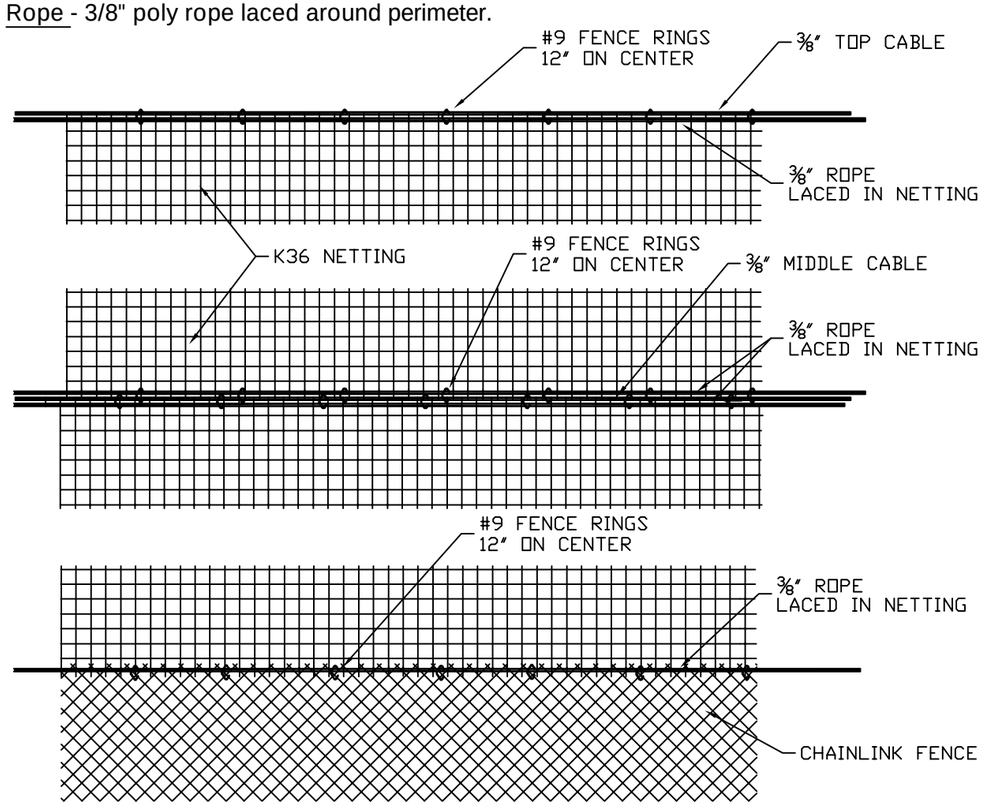

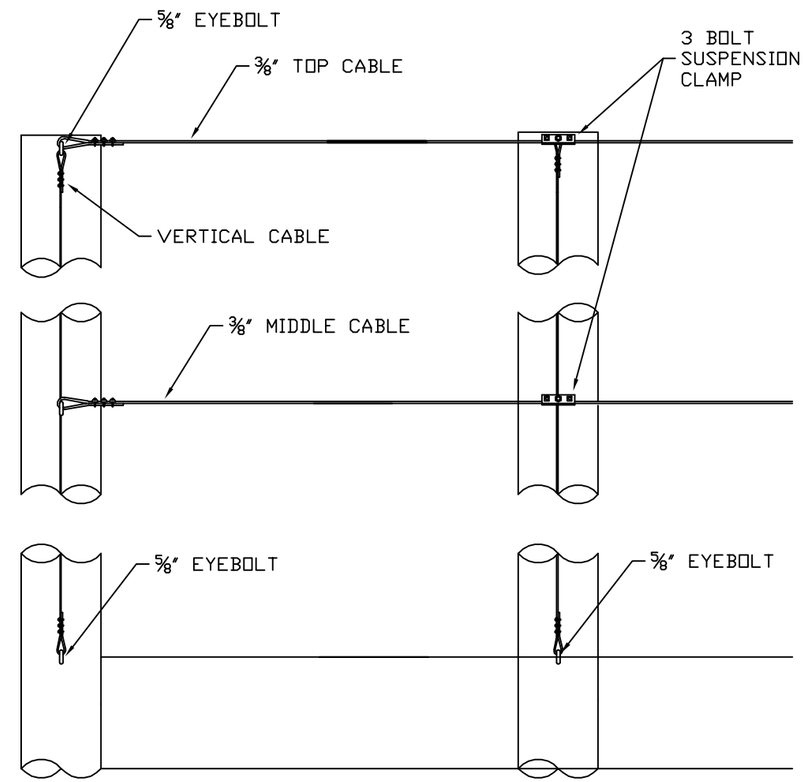

WCN
5075 Flightline Drive
Kingman, AZ. 86401
Office (928) 692-1144 Fax (928) 692+1501
Toll Free: (800) 854-5741
www.westcoastnetting.com

This structural system and details are proprietary and the exclusive product of WEST COAST NETTING, INC. No part of these drawings shall be reproduced, copied or used without the knowledge and written consent of WEST COAST NETTING, INC.

MARK	DATE	DESCRIPTION

PROJECT TITLE

SOFTBALL WEB

SHEET TITLE

SPECS & DETAILS

DATE: 3-9-11

SCALE: – SIZE: D

DRAWN BY: RLN

PROJECT NO.

DRAWING NO.

-

SHEET 6 OF 6